MCT-EQ3001

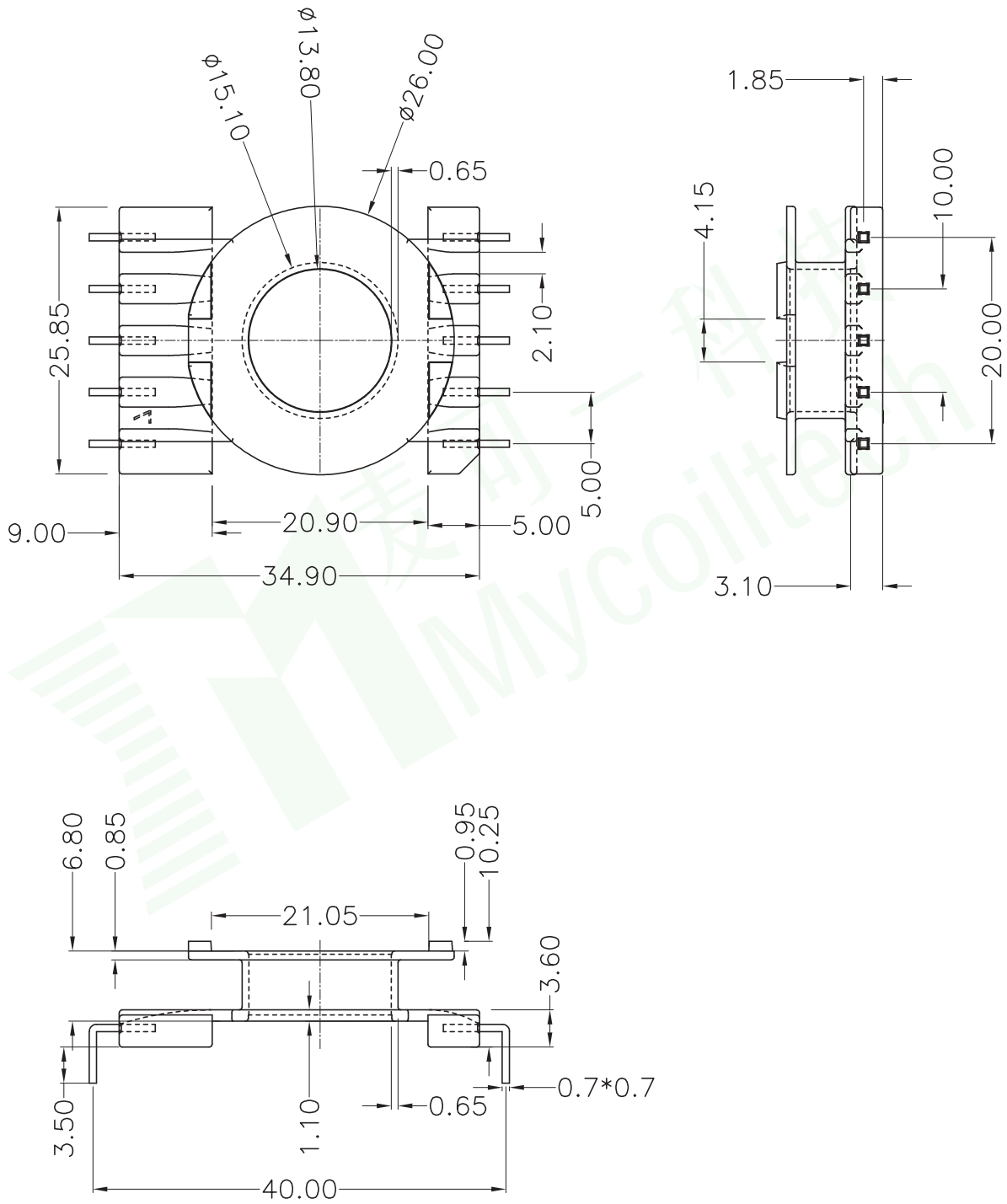

MODEL	EQ-30(V/5+5P)		UNIT:	mm	
MATERIAL	PHENOLIC		SCALE:	1:1	
DRAWN BY	Una Wu	2014.3.18	UL REC:	94V-0	
CHECK BY	Jason Hu	2014.3.18	TOLERANCE		
ISSED BY	James Hu	2014.5.16	0 < L≤6: ±0.1 6 < L≤20: ±0.2 20 < L≤50: ±0.3 50 < L: ±0.4	PIN PITCH:±0.2 THICKNESS: ±0.15 ANGLE: ±1° PIN DIA: ±0.05	

麦可一科技 Mycoiltech
Hefei mycoil technology Co.,LTD

WEBSITE	www.mycoiltech.com
TEL	(+86) 551 6619 6829
EMAIL	sales@mycoiltech.com